AGSINC

9950 W. 190th Street • Mokena, IL 60448
Ph: (708) 479-9458 • Fax: (708) 479-9478 • Toll Free: (866) 499-1122
www.agsshade.com

Architectural Grilles & Sunshades, Inc.

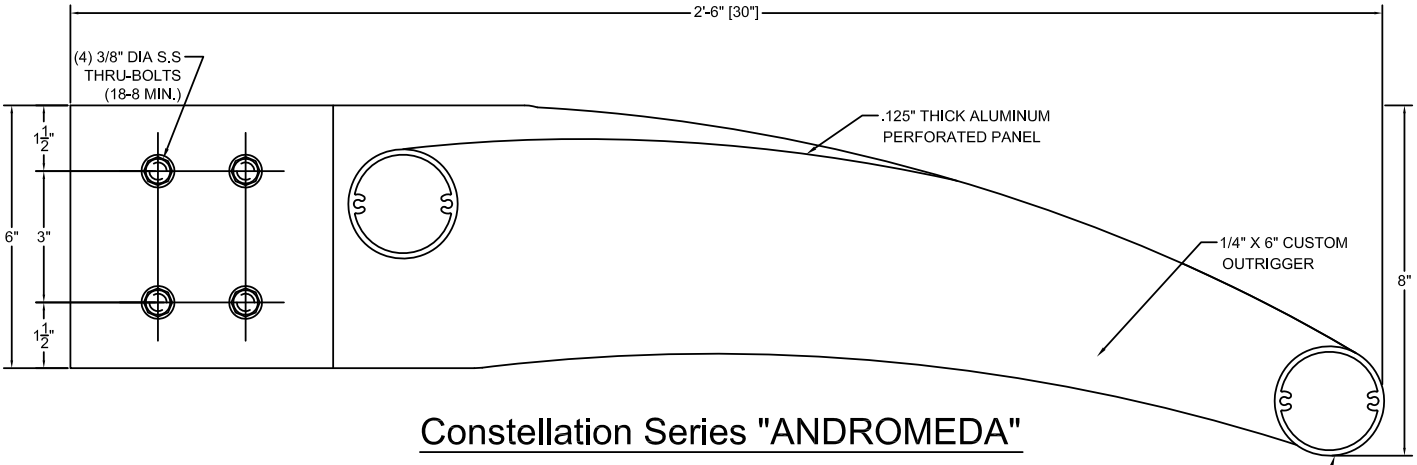

Constellation Series "ANDROMEDA"

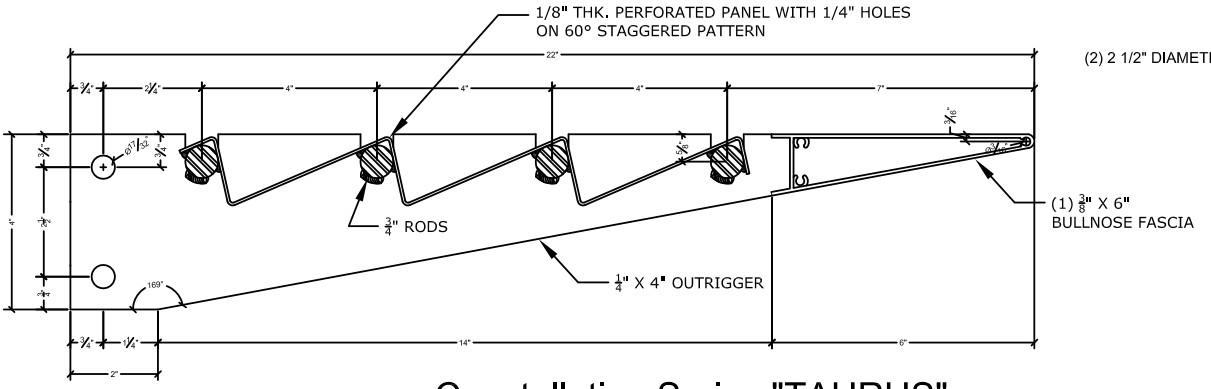

Constellation Series "TAURUS"

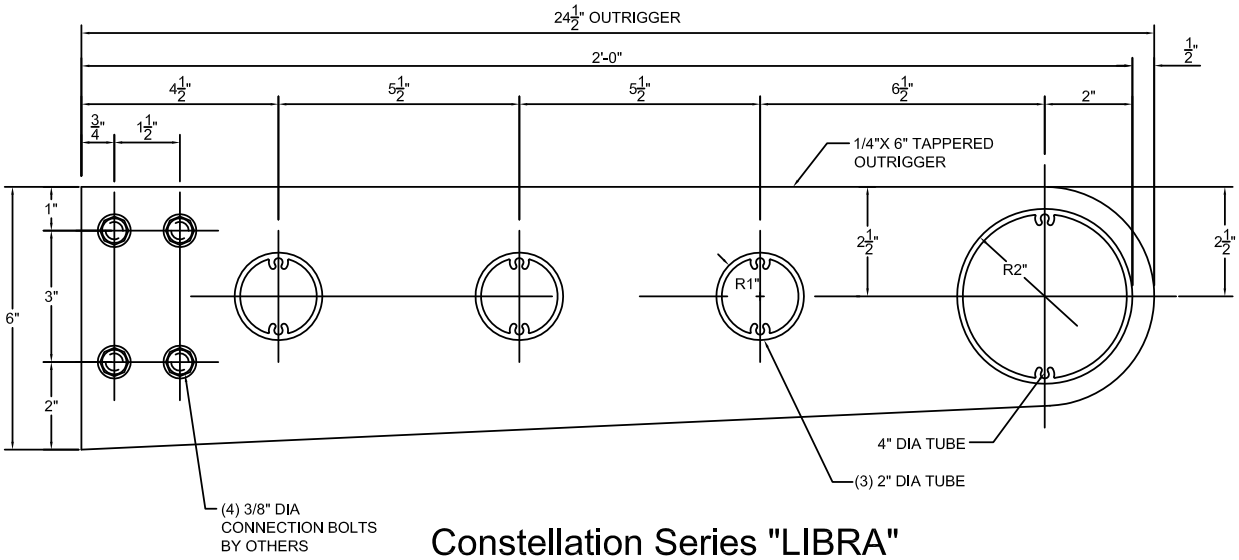

Constellation Series "LIBRA"

All the above models are available "as is" or "as a basis of design".
Qualified Engineering Modifications to the above sizes and shapes are available.